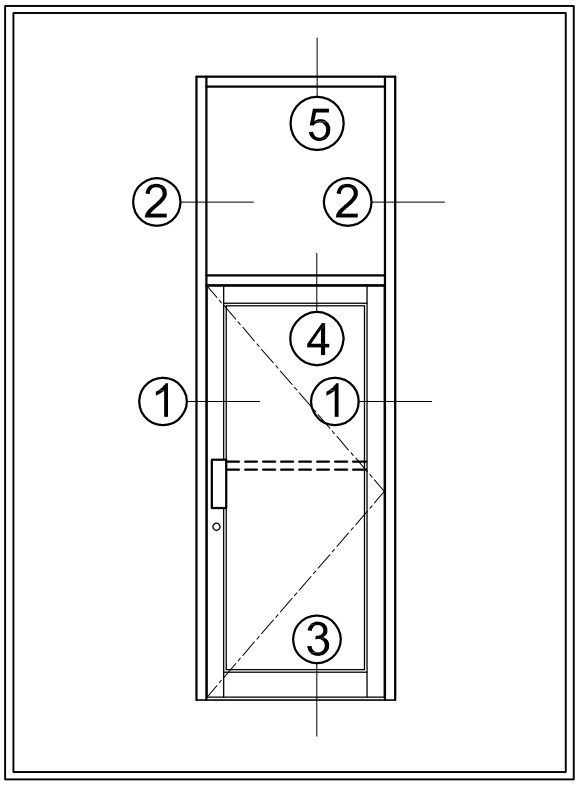

IRISION™ D500 SERIES FLUSH GLAZING SYSTEM

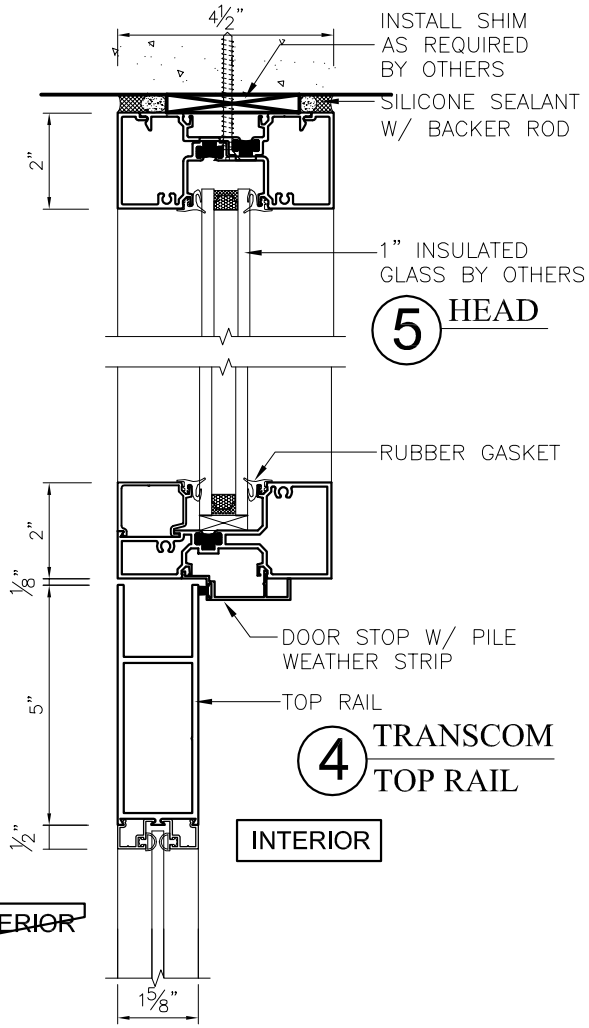

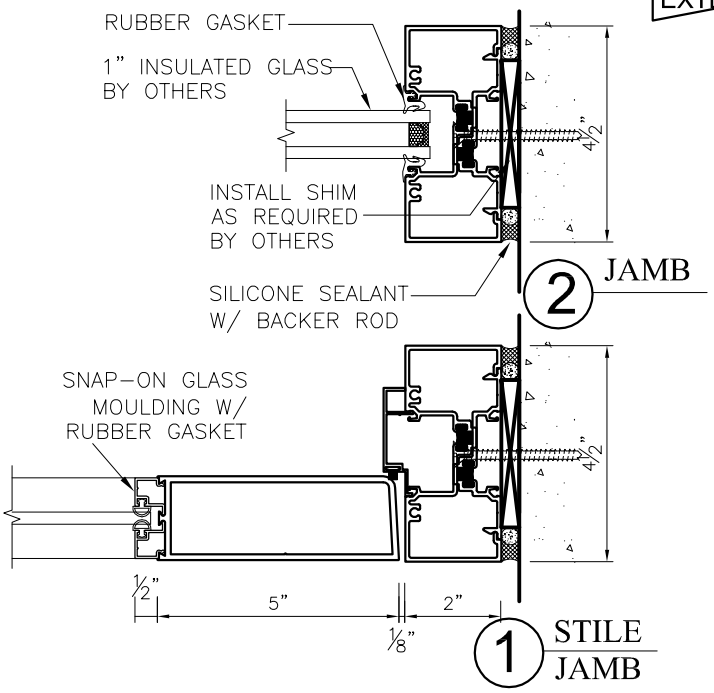

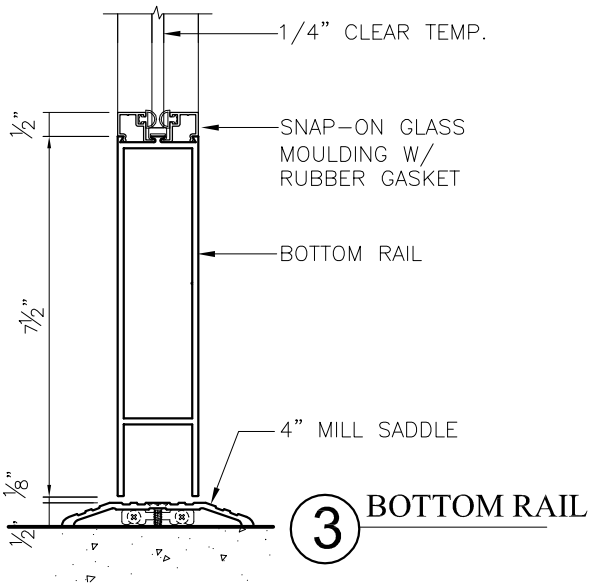

SHEET #	Drawn by: K. S. Lee	Customer	Revisions			**Gamco Corporation**
	Checked by: C. Chan		No.	Date	Description	*Manufacturer of* **IRISION™** *Products*
	Date:	Project Name:				131-10 Maple Ave.
	Scale: 1/4" : 1"					Flushing, New York 11355
						Tel (718) 359-8833 Fax (718) 359-8661
						E-mail: gamco 88@verizon.net